MODEL SPECIFICATION
SIGNMASTER ULTRA™
NARROW BOLT DOWN BASE

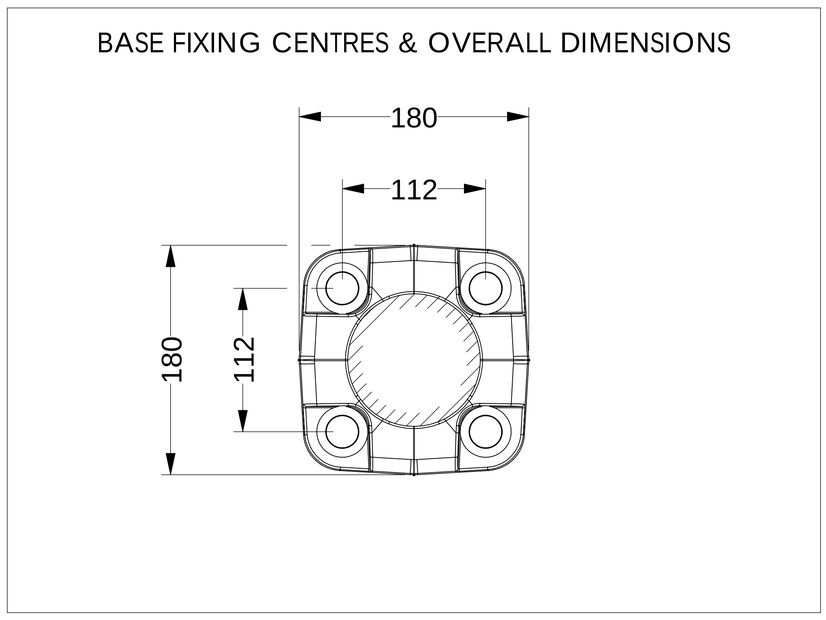

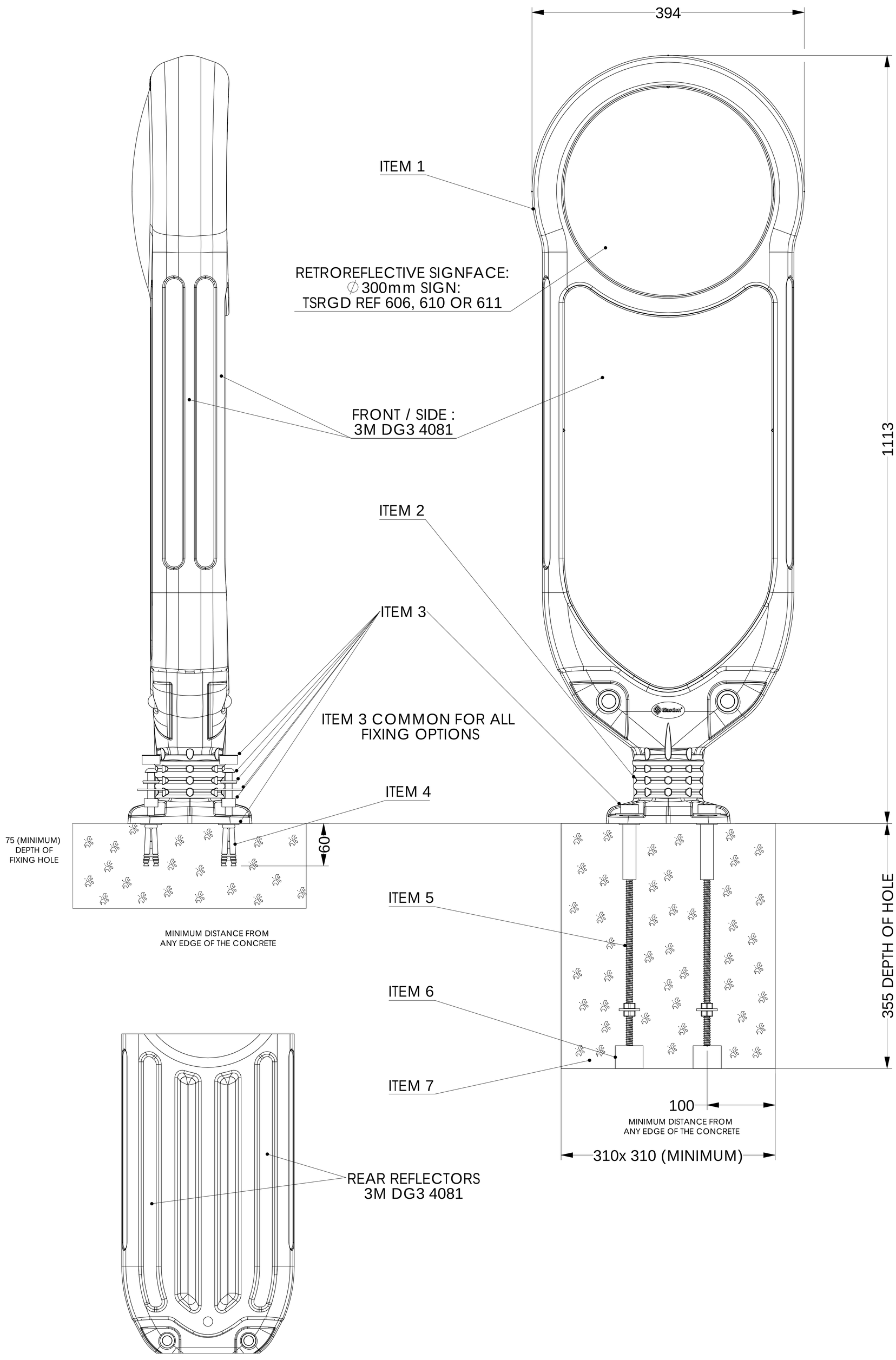

PRODUCT INFORMATION:

Å DESCRIPTION - BOLLARD ASSEMBLED - APPROX. WEIGHT: 5kg

- BOLLARD & SURFACE MOUNT FIXINGS (OPT. 1) APPROX. WEIGHT: 6kg
- BOLLARD & ADJ. DEPTH ANCHOR FIXINGS (OPT. 2) APPROX. WEIGHT: 7kg

Å MATERIAL
- BOLLARD: DURAPOLE
- BASE: IMPACTAPOLE
- CAPS: DURAPOLE

- FIXINGS: SCREWS & WASHERS - STAINLESS STEEL
- SPACERS - RIGID PVC
- OPT. 1: SURFACE MOUNT FIXINGS - MS BZP
- OPT. 2: ADJ. DEPTH ANCHOR BAR - MS BZP

Å DIMENSIONS - ALL DIMENSIONS IN mm
UNLESS OTHERWISE STATED

Å COLOURS
- BOLLARD : BLACK / WHITE
- BASE : BLACK / WHITE
- CAPS : BLACK / WHITE
- SCREW CAP : BLACK / WHITE

INSTALLATION GUIDE

Å ITEM 1 - BOLLARD TOP

Å ITEM 2 - BASE

Å ITEM 3 - GROUND FIXINGS

- M10 SCREW COVER CAP & RETAINER WASHER NYLON x4
- M10 x 80mm SOCKET HEAD SCREW - S/S x4
- M10 SLOT x ∅38mm x 3mm - WASHER - S/S x4
- M10 x ∅20mm x 12mm SPACER - NYLON x4
- M10 x ∅30mm x 1.5mm - WASHER - S/S x4

Å ITEM 4 - GROUND FIXING OPT. 1: SURFACE MOUNT FIXINGS x4

Å ITEM 5 - GROUND FIXING OPT. 2: ADJ. DEPTH ANCHOR BAR x4

Å ITEM 6 - SUPPORT BLOCK:
CAN BE ANYTHING SOLID TO ENSURE BOLLARD IS SUPPORTED AT THE CORRECT HEIGHT UNTIL THE CONCRETE HAS SET.

Å ITEM 7 - SOLID CONCRETE FOUNDATION OR QUICK SET CONCRETE (e.g GRADE QC10).

Å ENSURE THAT ANY SIGNFACE FACES TOWARDS ONCOMING TRAFFIC

Å FOR OPTION 1: SURFACE MOUNT FIXING:

4 HOLES TO BE DRILLED FOR SURFACE MOUNT FIXINGS AND SCREWS ∅16mm x 75mm (MIN DEPTH). ENSURE THE HOLES ARE LOCATED AT LEAST 100mm FROM ANY EDGE OF THE CONCRETE FOUNDATION.

RECOMMENDED MIN HOLE SIZE: 310 x 310 x 355mm DEEP

WE RECOMMEND INSTALLING THE BOLLARD ON AN EXISTING SOUND CONCRETE FOUNDATION OR FOR SPEED, PREPARING THE SITE WITH QUICK SETTING CONCRETE (e.g GRADE QC10), BUT EXACT INSTALLATION REQUIREMENTS SHOULD BE ASSESSED FROM A SITE SURVEY.

AVOID CONTACT WITH HOT TARMACADAM AS THIS WILL SERIOUSLY IMPAIR THE PERFORMANCE OF THE BOLLARD.

Å FOR OPTION 2: ADJ. DEPTH ANCHOR BARS (CONCRETE-IN):

FIX THE BARS TO THE BOLLARD BEFORE INSTALLATION, AS THIS WILL ENSURE FIXING CENTRES ARE CORRECT AND PREVENT THE NEED TO REVISIT THE SITE ONCE CONCRETE HAS SET.

RECOMMENDED MIN HOLE SIZE: 310 x 310 x 355mm DEEP (ADJ. DEPTH)

IF DEPTH IS RESTRICTED TO LESS THAN 355mm WHEN USING OPTION 2, THEN THE 'ADJ. DEPTH ANCHOR FIXING BARS' CAN BE CUT DOWN IF REQUIRED. HOWEVER WE RECOMMEND USING THE SAME VOLUME OF CONRETE BY INCREASING THE WIDTH OF THE HOLE TO COMPENSATE.

Å WE RECOMMEND INSTALLING WITH QUICK SETTING CONCRETE (e.g GRADE QC10) BUT EXACT INSTALLATION REQUIREMENTS SHOULD BE ASSESSED FROM A SITE SURVEY.

OPTIONAL PARTS:

Å OPTIONS AVAILABLE FOR THE PRODUCT:

- BODY C/W FRONT & 4x SIDE CONSPICUITY PANELS
- BODY C/W FRONT, 4x SIDE, 1 x LH & RH REAR CONSPICUITY PANELS
- PLUS A RANGE OF AUTHORISED SIGNFACES &/OR WHITE DISC

Å SPARES ARE AVAILABLE, WHICH INCLUDE:

- BOLLARD TOP C/W BASE CONNECTOR FIXINGS & RETROREFLECTIVE PATCHES
- BASE ONLY
- A RANGE OF SIGNFACES

TECHNICAL DATA:

Å SURFACE AREA OF CONSPICUITY PANELS:
- FRONT = 150300mm2
- 2 x SIDE = 21821mm2
- OPTIONAL REAR SIDE (1 x LH & 1 x RH) = 27818mm2

Å SURFACE AREA OF SIGNFACE = 70685mm2

Å ALL REFLECTIVE MATERIALS SUPPLIED BY GLASDON UK ARE AS RECOMMENDED IN TABLE NA1 OF THE NATIONAL ANNEX OF BS EN 12899-1 2007 FIXED VERTICAL ROAD SIGNS. MICROPRISMATIC RETROREFLECTIVE MATERIALS USED ON OUR PRODUCTS MEET THE REQUIREMENTS OF BS 8408 2005 ROAD TRAFFIC SIGNS. TESTING AND PERFORMANCE OF MICROPRISMATIC RETROREFLECTIVE SHEETING MATERIALS WHEN SITED NORMALLY AND USED IN THEIR NORMAL APLICATION.

Å SIGNMASTER ULTRA MEETS THE REQUIREMENTS OF BS EN 8442:2015 MISCELLANEOUS ROAD TRAFFIC SIGNS AND DEVICES.

Glasdon®
Glasdon group Ltd.

Website: www.glasdon.com
Email: sales@glasdon.com
Telephone: 01253 600 400
Facsimile: 01253 732558

Copyright of this dwg. is reserved by Glasdon Group. The issue of this dwg. is a confidential disclosure of its contents, and is made on condition that it is neither disclosed to a third party, nor any item described herein and designed by Glasdon Group, is produced either in whole or in part without the prior written consent of Glasdon Group.

SPECIFICATION NUMBER - 02S088-S02	ISSUE 01
GLASDON GROUP LTD 17/05/21	SHEET SIZE : A0